ENERCON TECHNOLOGIES LTD

FIELD-PROVEN COTS, MOTS AND CUSTOM MILITARY POWER SOLUTIONS

# M169 SERIES

*AC/DC POWER SUPPLY*

## PRODUCT HIGHLIGHTS

- **HIGH POWER FACTOR**
- **HIGH DENSITY**
- **SINGLE OUTPUT**
- **1-PHASE AC-DC POWER SUPPLY**
- **Up to 1,000W**

NON ITAR

AS9100D CERTIFIED ISO 9001


ENERCON TECHNOLOGIES LTD

***Cham, Switzerland***
www.enercon-europe.com
enercon@enercon-europe.com
+41 41 740 4554

**Global Headquarters**

***Netanya, Israel***
www.enercon.co.il
sales@enercon.co.il
+972-73-246 9200

MULTISPHERE POWER SOLUTIONS PVT. LTD.

***Gurgaon, India***
www.mpsindia.in
sales@mpsindia.in
+91-124-651 0010

## *Applications*

Military (Airborne, ground-fix, shipboard), Ruggedized, Telecom, Industrial Power Supply

## *Special Features*

- High efficiency
- Wide input range
- High power factor
- Input / Output isolation
- Remote sense compensation
- Remote Inhibit (On/Off)
- Fixed switching freq. (250 kHz)
- External sync. capability
- EMI filters included
- Inrush current limiter
- Non-latching protections:
  - Overload / short-circuit
  - Input under-voltage lockout
  - Output over-voltage
  - Over temperature

## *Electrical Specifications*

***AC Input***

single-phase
85 to 265 $V_{AC}$
50 to 400 Hz

***DC Output***

Voltage range: 3.3 to 300 $V_{DC}$
Power range: 1 000 W
Current range: 0 to 80 A.

***Isolation***

1 000 $V_{DC}$ Input to Output
1 000 $V_{DC}$ Input and Case
200 $V_{DC}$ Output and Case

***Output Voltage Regulation***

Up to ±1%
(no load to full load, –40 °C to +85 °C and over normal input voltage range).

***Efficiency***

Up to 85-87% - typical
(nominal input voltage, full load, room temperature)

***EMC***

Designed to meet MIL-STD-461F*:
CE101, CE102, CS101, CS114, CS115, CS116, RE101, RE102, RS101, RS103

***Ripple and Noise***

100 to 150 $mV_{p-p}$, typical (max. 1%) without external capacitance.
When connected to external capacitance ripple drops significantly.

***Turn-On Transient***

No voltage overshoot during power-on.

* Compliance achieved with shielded harness and static resistive load. Depending on actual configuration, an external filter may be required for full compliance.

## *Protections* **

***Input***

- **Inrush Current Limiter**
- **Under-Voltage Lock-Out**
  Output shuts down when input voltage falls below 75 ± 5 $V_{AC}$.
  Output turns on when input voltage rises above 85 ± 5 VAC.

***Output***

- **Active Over-Voltage Protection**
  Internal control shuts output down if voltage exceeds 110% ± 5% of nominal.
- **Passive Over-Voltage Protection**
  A transorb, rated to 120% ± 10% of nominal voltage, is placed across the output.
- **Current Limiting**
  Output turns off and on periodically (hiccup) until fault is condition removed. Protection threshold set at 120% ± 10% of maximum current.

**General**

- **Over Temperature Protection**
  Unit shuts down if baseplate temperature exceeds 105 ± 5 °C. Automatic recovery upon cooldown to below 95 ± 5 °C.

## *Environmental Conditions*

Designed to Meet MIL-STD-810F

***Temperature***
Methods 501.4 & 502.4
Operating: –40 °C to +85 °C (at baseplate)
Storage: –55 °C to +125 °C (ambient)

***Altitude***
Method 500.4
Procedures I – up to 70,000 ft. (non-operational)
Procedure II – up to 40,000 ft. (operational)

***Humidity***
Method 507.4
Procedure I
Up to 95% RH

***Vibration***
Method 514.5
Procedure I
Category 24 - General minimum integrity exposure

***Shock***
Method 516.5
Procedure I
30 g, 11 ms terminal peak saw-tooth

***Salt Fog***
Method 509.4

## *Reliability*

150,000 hours, calculated per MIL-STD-217F Notice 2 at +85 °C baseplate, Ground Fixed environment.

## *Environmental Stress Screening (ESS)*

100% of delivered power supplies are tested at low ambient temperature, high baseplate temperature and at standard room temperature.
Additional tests, such as random vibration and thermal cycling can be added. **Consult factory for details.**

** Thresholds and protections can be modified / removed – **please consult factory.**

## *Pin Assignment*

### Input Connector (J1):

**Connector type:** M24308/24-38F or eq.

**Mates with:** M24308/2-2F or eq.

| Pin # | Function | P |
|---|---|---|
| 1 | PHASE | ~ |
| 2 | PHASE | ~ |
| 3 | PHASE | ~ |
| 4 | N.C. | |
| 5 | NEUTRAL | 0 |

| Pin # | Function | P |
|---|---|---|
| 6 | NEUTRAL | 0 |
| 7 | N.C. | |
| 8 | CHASSIS | |
| 9 | PHASE | ~ |
| 10 | PHASE | ~ |

| Pin # | Function | P |
|---|---|---|
| 11 | N.C. | |
| 12 | NEUTRAL | 0 |
| 13 | NEUTRAL | 0 |
| 14 | NEUTRAL | 0 |
| 15 | N.C. | |

### Output Connector (J2):

**Connector type:** M24308/23-41F or eq.

**Mates with:** M24308/4-5F or eq.

| Pin # | Function | P |
|---|---|---|
| 1 | SIGNAL RTN | – |
| 2 | SYNC OUT | + |
| 3 | SENSE | + |
| 4 | OUT | + |
| 5 | OUT | + |
| 6 | OUT | + |
| 7 | OUT | + |
| 8 | OUT | + |
| 9 | OUT | + |
| 10 | OUT | + |
| 11 | OUT RTN | – |
| 12 | OUT RTN | – |
| 13 | OUT RTN | – |
| 14 | OUT RTN | – |
| 15 | OUT RTN | – |
| 16 | OUT RTN | – |
| 17 | OUT RTN | – |

| Pin # | Function | P |
|---|---|---|
| 18 | INHIBIT OUT | + |
| 19 | SENSE RTN | – |
| 20 | OUT | + |
| 21 | OUT | + |
| 22 | OUT | + |
| 23 | OUT | + |
| 24 | OUT | + |
| 25 | OUT | + |
| 26 | OUT | + |
| 27 | OUT RTN | – |
| 28 | OUT RTN | – |
| 29 | OUT RTN | – |
| 30 | OUT RTN | – |
| 31 | OUT RTN | – |
| 32 | OUT RTN | – |
| 33 | OUT RTN | – |
| 34 | SYNC IN | + |

| Pin # | Function | P |
|---|---|---|
| 35 | INHIBIT IN | + |
| 36 | N.C. | |
| 37 | OUT | + |
| 38 | OUT | + |
| 39 | OUT | + |
| 40 | OUT | + |
| 41 | OUT | + |
| 42 | OUT | + |
| 43 | OUT | + |
| 44 | OUT RTN | – |
| 45 | OUT RTN | – |
| 46 | OUT RTN | – |
| 47 | OUT RTN | – |
| 48 | OUT RTN | – |
| 49 | OUT RTN | – |
| 50 | OUT RTN | – |
| | | |

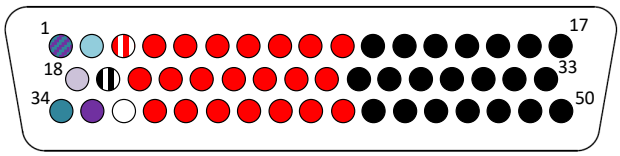


**Note:** All pins with identical function/designation should be connected together for best performance.

**HV option: High voltage version (100 to 300 VDC)**

| Pin # | Function | P |
|---|---|---|
| 1 | SIGNAL RTN | – |
| 2 | SYNC OUT | + |
| 3 | N.C. | + |
| 4 | OUT | + |
| 5 | OUT | + |
| 6 | OUT | + |
| 7 | OUT | + |
| 8 | OUT | + |
| 9 | OUT | + |
| 10 | OUT | + |
| 11 | OUT RTN | – |
| 12 | OUT RTN | – |
| 13 | OUT RTN | – |
| 14 | OUT RTN | – |
| 15 | OUT RTN | – |
| 16 | OUT RTN | – |
| 17 | OUT RTN | – |

| Pin # | Function | P |
|---|---|---|
| 18 | INHIBIT OUT | + |
| 19 | N.C. | – |
| 20 | OUT | + |
| 21 | OUT | + |
| 22 | OUT | + |
| 23 | OUT | + |
| 24 | OUT | + |
| 25 | OUT | + |
| 26 | OUT | + |
| 27 | OUT RTN | – |
| 28 | OUT RTN | – |
| 29 | OUT RTN | – |
| 30 | OUT RTN | – |
| 31 | OUT RTN | – |
| 32 | OUT RTN | – |
| 33 | OUT RTN | – |
| 34 | SYNC IN | + |

| Pin # | Function | P |
|---|---|---|
| 35 | INHIBIT IN | + |
| 36 | N.C. | |
| 37 | OUT | + |
| 38 | OUT | + |
| 39 | OUT | + |
| 40 | OUT | + |
| 41 | OUT | + |
| 42 | OUT | + |
| 43 | OUT | + |
| 44 | OUT RTN | – |
| 45 | OUT RTN | – |
| 46 | OUT RTN | – |
| 47 | OUT RTN | – |
| 48 | OUT RTN | – |
| 49 | OUT RTN | – |
| 50 | OUT RTN | – |
| | | |

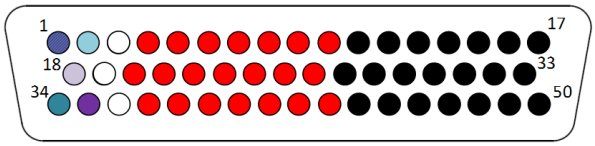

## *Functions and Signals*

**INHIBIT IN**
The INHIBIT IN signal is used to turn the power supply ON and OFF.
TTL "1"or OPEN – will turn on the power supply. (For normal operation leave the signal not connected.)
TTL "0" – will turn off the power supply.
Ground reference for the INHIBIT IN signal is SIGNAL RTN (pin #1).

**INHIBIT OUT**
Used when connecting two units or more in parallel.
Connect this signal to the INHIBIT IN pin of the slave unit (see diagram below). This signal synchronizes the shutdown and startup of the units.

**SENSE**
The SENSE is used to achieve accurate load regulations at load terminals (this is done by connecting the pins directly to the load's terminals).
The use of remote sense has a max limit of 0.5V voltage dropout between converter's output and load terminals of 2-10% of voltage output.
When not used connect SENSE to OUT and SENSE RTN to OUT RTN.

**SYNC IN**
The SYNC IN signal is used to allow the power supply frequency to sync with the system frequency. The system frequency should be 250 kHz ± 10 kHz.
When not connected the power supply will work at 250 kHz ± 10 kHz.

**SYNC OUT**
The SYNC OUT signal is used to sync the system with the power supply frequency.

**SIGNAL RTN**
The SIGNAL RTN is a floated ground.
This pin is used as ground return for SYNC IN, SYNC OUT, INHIBIT IN and INHIBIT OUT signals.

**CHASSIS**
This pin is connected to the converter's chassis.

## *Typical Connection*

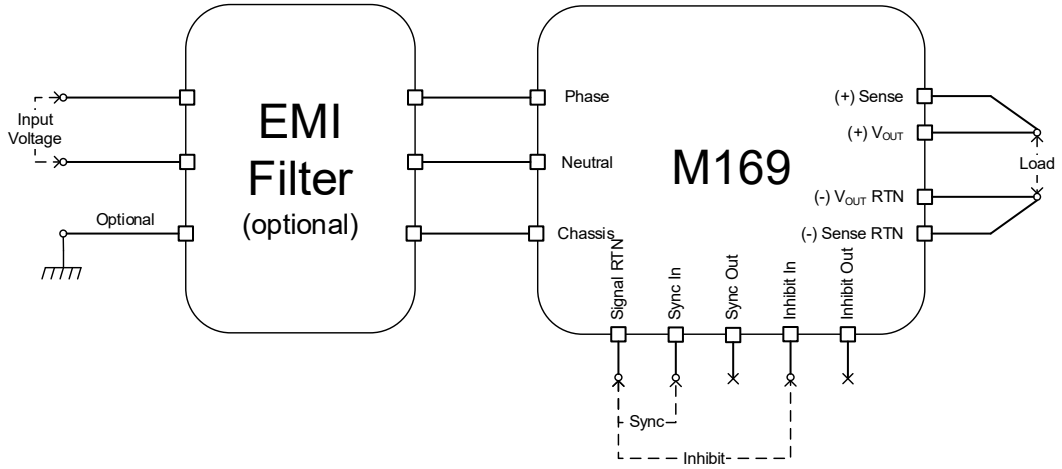


## *Parallel Connection*

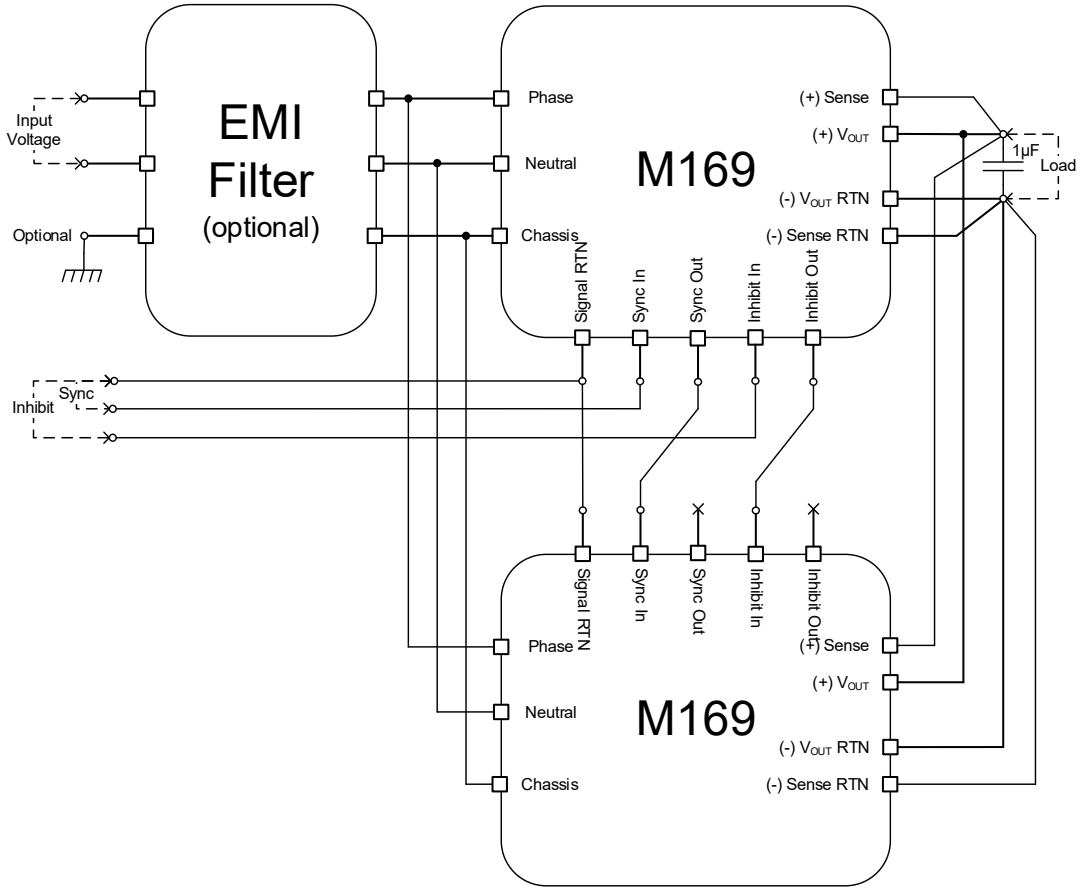

## *Outline Drawing*

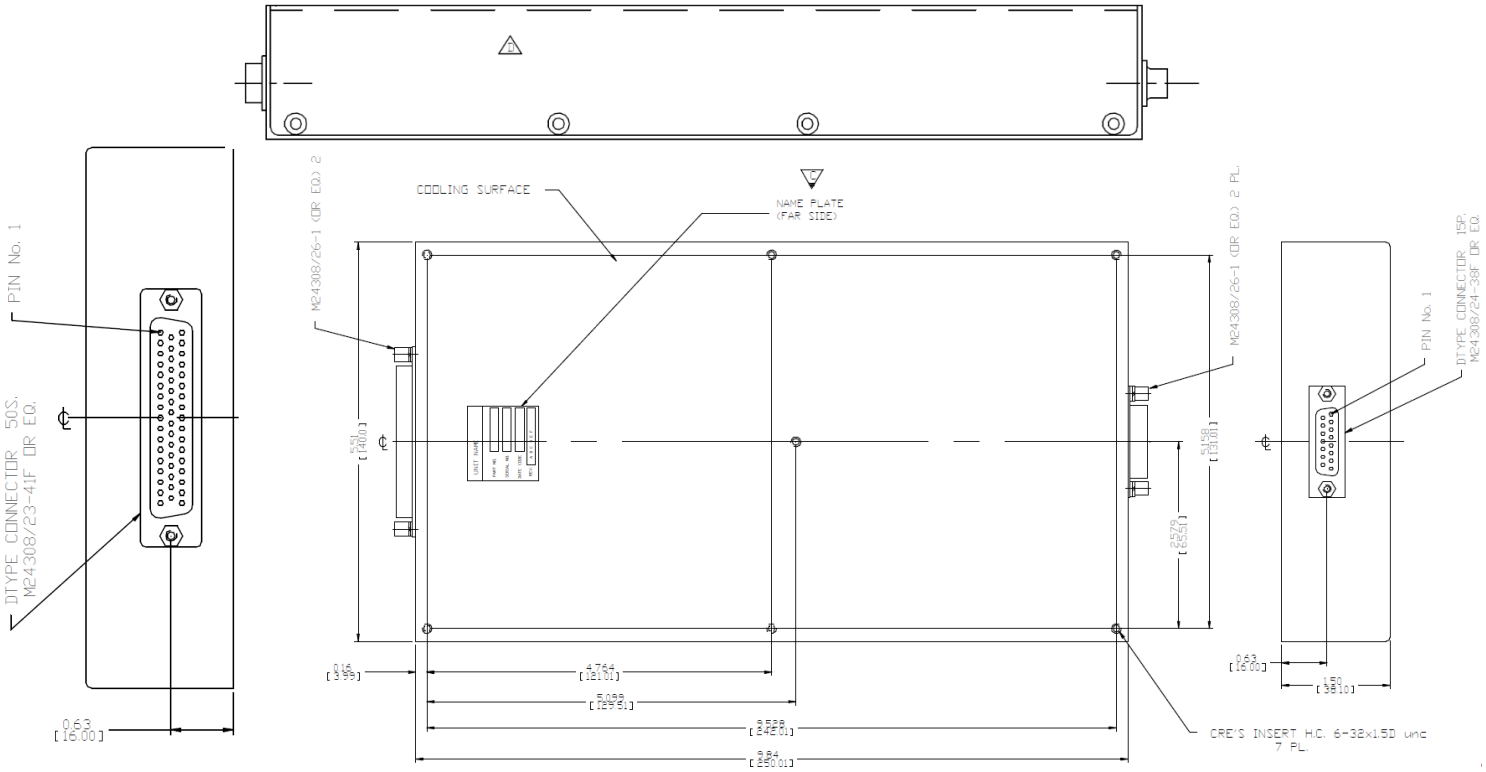


## *Heat Dissipation Surface*

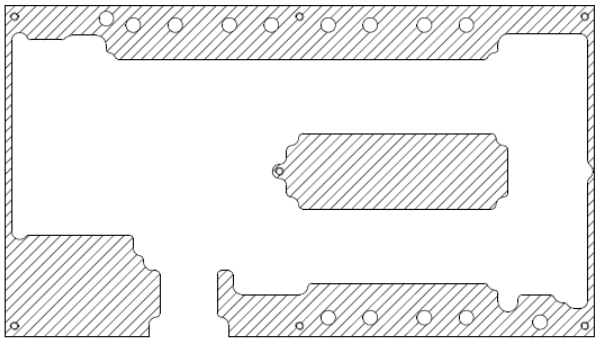

Dissipation Area
21.08 in²
(13,600 mm²)

**Notes**

1. Dimensions are in inches [mm]
2. Tolerance is:
   .XX ± .02 in
   .XXX ± .01 in
3. Weight: 4.25 lbs [1 922 g]

### *Standard Configurations*

| Part number | Input | | Output | |
|---|---|---|---|---|
| | Voltage range | Frequency | Voltage | Current |
| M169-100 | 1-phase, 85 to 265 $V_{AC}$ | 50 to 400 Hz | 5 $V_{DC}$ | 70 A |
| M169-101 | 1-phase, 85 to 265 $V_{AC}$ | 50 to 400 Hz | 12 $V_{DC}$ | 70 A |
| M169-102 | 1-phase, 85 to 265 $V_{AC}$ | 50 to 400 Hz | 24 $V_{DC}$ | 42 A |
| M169-103 | 1-phase, 85 to 265 $V_{AC}$ | 50 to 400 Hz | 28 $V_{DC}$ | 36 A |
| M169-104 | 1-phase, 85 to 265 $V_{AC}$ | 50 to 400 Hz | 48 $V_{DC}$ | 21 A |

**Note: Specifications are subject to change without prior notice by the manufacturer**