ENERCON
TECHNOLOGIES LTD

FIELD-PROVEN COTS, MOTS AND CUSTOM MILITARY POWER SOLUTIONS

M183 SERIES

AC/DC POWER SUPPLY

PRODUCT HIGHLIGHTS

- COMPACT
- HIGH EFFICIENCY
- HIGHT DENSITY
- SINGLE OUTPUT
- AC/DC POWER SUPPLY
- UP TO 1000 W

NON ITAR

AS9100D CERTIFIED ISO 9001

ENERCON TECHNOLOGIES LTD

Cham, Switzerland
www.enercon-europe.com
enercon@enercon-europe.com
+41 41 740 4554

Global Headquarters

Netanya, Israel
www.enercon.co.il
sales@enercon.co.il
+972-73-246 9200

MULTISPHERE POWER SOLUTIONS PVT. LTD.

Gurgaon, India
www.mpsindia.in
sales@mpsindia.in
+91-124-651 0010

Applications

Military (Airborne, ground-fix, shipboard), Ruggedized, Telecom, Industrial

Special Features

- Miniature size
- High efficiency
- Wide input range
- Input / Output isolation
- Limited Inrush Current
- External On/Off Inhibit
- Fixed switching freq. (400 kHz)
- External sync. capability
- EMI filters included
- Up to 28 W/in³
- Power Factor 85%-90% at 75-100% load.
- Indefinite short circuit protection with auto-recovery
- Over-voltage shutdown with auto-recovery
- Over temperature shutdown with auto-recovery

Electrical Specifications

Input Voltage Range

AC Input range:
115V_{AC}, 50/60/400Hz, 3-phase, per MIL-STD-704A.

DC Output

Voltage range: 5V to 50V
Output power: Up to 1000W
Output current: Up to 42A

Isolation

Input to Output: 500V_{DC}
Input to Case: 500V_{DC}
Output to Case: 100V_{DC}

Line/Load regulation

Less than 1% (Low line to high line, no load to full load, –55°C to +85°C).

Efficiency

90% typical (full load, nominal line voltage, room temperature)

EMC**

Designed to meet MIL-STD-461D:
CE102, CS101, CS114, CS115, CS116, RE102, RS101, RS103

Ripple and Noise

100-150mV_{p-p}, typical (max. 1%) without external capacitance.

Turn on Transient

No Voltage over shoot during power on.

Protections ***

Input

- **Inrush Current Limiter** Peak value of 6 x I_{nom} for inrush currents lasting over 50µs.

Output

- **Passive Over-Voltage Protection** Transorb on outputs, chosen at 120% ± 10% of nominal voltage.
- **Current Limiting** Continuous protection (10-30% above maximum current) for unlimited time.

General

- **Over Temperature Protection** Shutdown if baseplate temperature rises above +105°C ± 5°C. Automatic recovery upon cool down when baseplate temperature drops below +95°C ± 5°C.

Environmental Conditions

Designed to meet MIL-STD-810F

Temperature

Operating: –55°C to +85°C (base plate)
Storage: –55°C to +125°C

Altitude

Method 500.4, Procedure I & II, 40,000 ft. and 70,000 ft. Operational

Salt Fog

Method 509-4

Humidity

Method 507.4 - Up to 95%.

Vibration and Shock

Shock: Saw-tooth, 20g peak, 11ms.
Vibration: Figure 514.5C-17. General minimum integrity exposure, 1 hour per axis.

Reliability

150,000 hours, calculated per MIL-STD-217F at +85°C base plate, Ground fixed.

Environmental Stress Screening (ESS)

Including random vibration and thermal cycles is also available. Please consult factory for details.

* Available on special versions. Contact factory for further details.
** Depending on configuration, an external filter may be required to comply with EMI requirements.
*** Thresholds and protections can be modified / removed – please consult factory.

Pin Assignment

Connector J1 (Input)

Connector type: M24308/24-38F or eq.
Mating connector: M24308/2-2F or eq.

Pin No.	Pin Function	Pin No.	Pin Function
1	*N.C.*	9	*PHASE C*
2	*PHASE C*	10	*PHASE C*
3	*N.C.*	11	*N.C.*
4	*PHASE B*	12	*PHASE B*
5	*PHASE B*	13	*N.C.*
6	*N.C.*	14	*PHASE A*
7	*PHASE A*	15	*PHASE A*
8	*N.C.*		

Connector J2 (Output)

Connector type: M24308/23-39F or eq.
Mating connector: M24308/4-3F or eq.

Pin No.	Pin Function	Pin No.	Pin Function	Pin No.	Pin Function
1	*SENSE*	10	*OUT RTN (–)*	19	*OUT (+)*
2	*SENSE RTN*	11	*OUT RTN (–)*	20	*OUT RTN (–)*
3	*INHIBIT*	12	*OUT RTN (–)*	21	*OUT RTN (–)*
4	*OUT (+)*	13	*OUT RTN (–)*	22	*OUT RTN (–)*
5	*OUT (+)*	14	*OUT (+)*	23	*OUT RTN (–)*
6	*OUT (+)*	15	*OUT (+)*	24	*OUT RTN (–)*
7	*OUT (+)*	16	*OUT (+)*	25	*OUT RTN (–)*
8	*OUT (+)*	17	*OUT (+)*		
9	*OUT RTN (–)*	18	*OUT (+)*		

* All output parallel pins should be connected together for best performance.

Functions and Signals

INHIBIT signal

The INHIBIT signal is used to turn the power supply ON and OFF.
TTL "1" or OPEN – Power supply active (output turned on).
TTL "0" or SHORT to Output RTN – Power supply inhibited (output turned off).
If this function is not required, leave this pin unconnected.

SENSE

The SENSE line is used to achieve accurate voltage regulation at load terminals.
To use this feature, connect this pin directly to load's positive terminal.
If this function is not required, short SENSE pin to OUTPUT pins as close as possible to the unit.

SENSE RTN

The SENSE RTN line is used to achieve accurate voltage regulation at load terminals.
To use this feature, connect this pin directly to load's negative terminal.
If this function is not required, short SENSE RTN pin to OUTPUT RTN pins as close as possible to the unit.

Note: The use of remote sense has a limit of voltage dropout between the converter's output and the load's terminals of approximately 5% of nominal output voltage.

Typical Connection

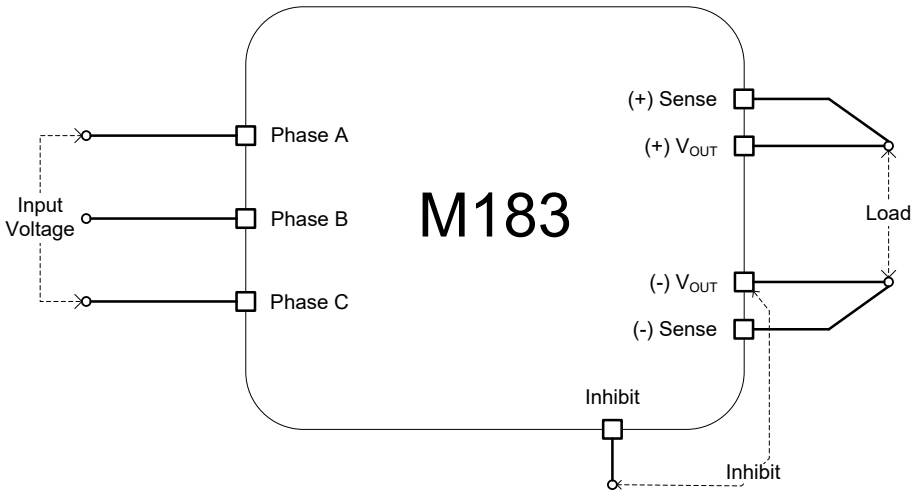

Outline Drawing

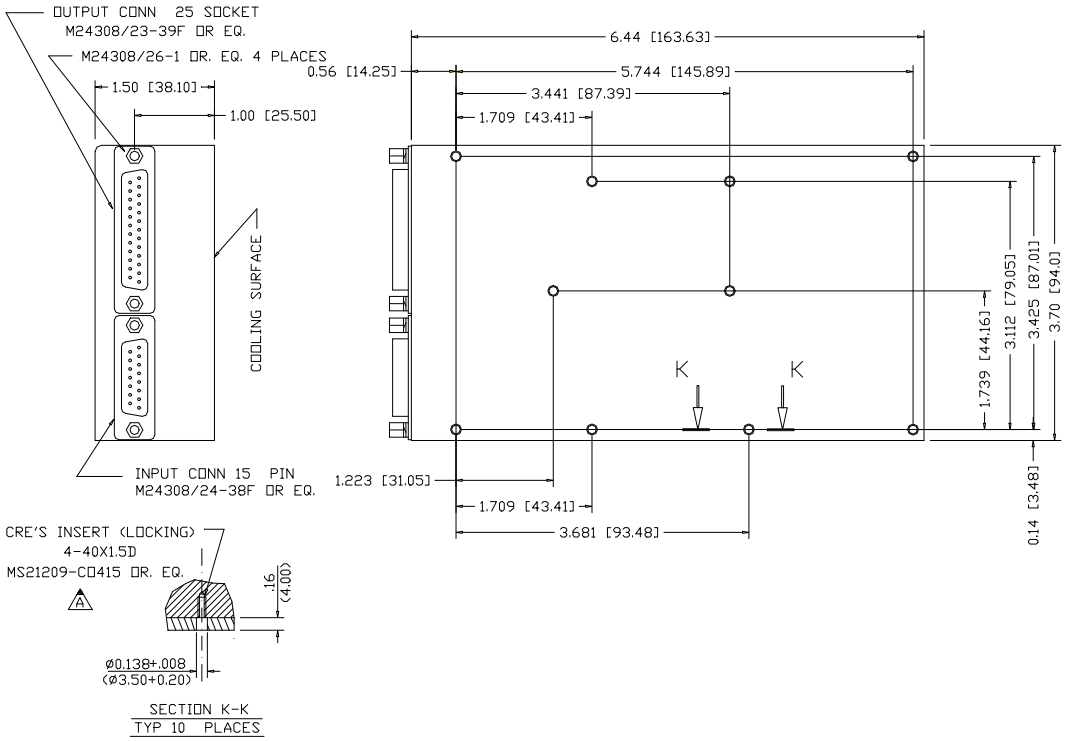

Heat Dissipation Surface

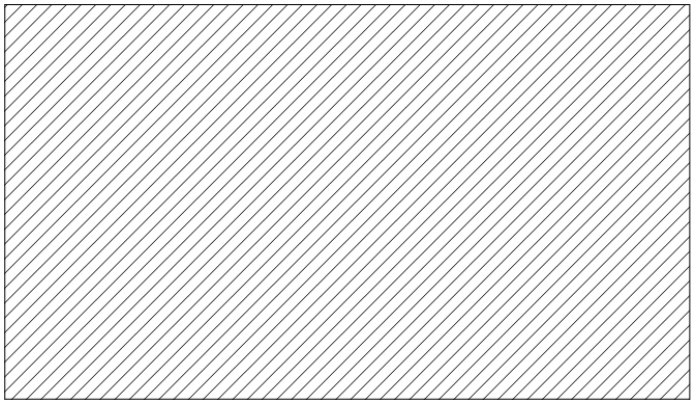

Dissipation Area
23.84 in²
(15380 mm²)

Notes

1. Dimensions are in Inches [mm]
2. Tolerance is:
   .XX ±.02 IN
   .XXX ±.01 IN
3. Weight: 37.4 oz (1075 g)
4. Parasolid 3D model available

Standard Configurations

Part number	Input		Output	
	Voltage range	Frequency	Voltage	Current
M183-100	3-phase, 103 to 127 V_{AC}	400 Hz	5 V_{DC}	40 A
M183-101	3-phase, 103 to 127 V_{AC}	400 Hz	12 V_{DC}	40 A
M183-102	3-phase, 103 to 127 V_{AC}	400 Hz	15 V_{DC}	40 A
M183-103	3-phase, 103 to 127 V_{AC}	400 Hz	24 V_{DC}	40 A
M183-104	3-phase, 103 to 127 V_{AC}	400 Hz	28 V_{DC}	36 A
M183-105	3-phase, 103 to 127 V_{AC}	400 Hz	48 V_{DC}	20 A

Note: Specifications are subject to change without prior notice by the manufacturer