M5252 SERIES - PRELIMINARY

28VDC TO 115V/230VAC SINGLE PHASE INVERTER

The M5252 is a rugged, baseplate-mounted, conduction-cooled, DC/AC inverter, designed for airborne applications. It converts standard $28V_{DC}$ aircraft electrical power bus to single-phase $115V_{AC}$ or $230V_{AC}$ at 50/60/400 Hz.
The product is designed to meet MIL-STD requirements specified herein.

Standard Models List

Part number	Input	Output			Special Features
	Voltage	Voltage	Frequency	Power	
M5252-100	$28V_{DC}$ per MIL-STD-704F	115 V_{AC}	60Hz	1kVA	
M5252-101	$28V_{DC}$ per MIL-STD-704F	230 V_{AC}	50Hz	1kVA	
M5252-102	$28V_{DC}$ per MIL-STD-704F	115 V_{AC}	400Hz	1kVA	
M5252-103	$28V_{DC}$ per MIL-STD-704F	115 V_{AC}	60Hz	1kVA	Current Share
M5252-104	$28V_{DC}$ per MIL-STD-704F	230 V_{AC}	50Hz	1kVA	Current Share
M5252-105	$28V_{DC}$ per MIL-STD-704F	115 V_{AC}	400Hz	1kVA	Current Share
M5252-106	$28V_{DC}$ per MIL-STD-704F	115 V_{AC}	60Hz	1kVA	3-Phase Connection
M5252-107	$28V_{DC}$ per MIL-STD-704F	230 V_{AC}	50Hz	1kVA	3-Phase Connection
M5252-108	$28V_{DC}$ per MIL-STD-704F	115 V_{AC}	400Hz	1kVA	3-Phase Connection
M5252-109	$28V_{DC}$ per MIL-STD-704F	66.4 V_{AC}	400Hz	550VA	3-Phase Connection

- Additional configurations available. **Contact factory for more details.**
- All our products can be configured to comply with EU REACH regulations. **Contact factory for more details.**

Technical Specifications

DC Input	***Voltage Range***	Steady State: 22VDC - 29VDC per MIL-STD-704F Transient: 50V/50ms per MIL-STD-704F
	Isolation	200V Input to Chassis
	Inrush Current	<TBD Amps for TBD Sec.
	Input Protection	- Under Voltage Lockout - Reverse Polarity
AC Output	***Rating***	1kVA
	Output Voltage and Frequency	Per customer's request (115V/230V; 50/60/400Hz).
	Isolation	500V Output to Input and Chassis
	Efficiency	≥ 80% (full load, nominal input at room temperature)
	Output Protection	- Over voltage (latching) - Overload (three retries, then latching) - Shorted output (three retries, then latching)
	Over Temp. Protection	95°C ± 5°C @ baseplate (TBD)
	Current sharing capability	Variant dependent option. Up to three units can be paralleled. Paralleling of additional units optional. Contact factory for further details.
	3-phase connection capability	Variant dependent option. 3 Units can be connected in 3-phase configuration. Contact factory for further details.

Specifications (Cont.):

Environment Designed to meet MIL-STD-810G	***Temperature***	Operating: -40°C ÷ 71°C (Baseplate cooled) Storage: -55°C ÷ 125°C
	Humidity	MIL-STD-810G, Method 507.5 up 95% RH
	Salt-fog	MIL-STD-810G, Method 508.6
	Altitude	MIL-STD-810G, Method 500.5 Procedure I, up to 40,000ft
	Mechanical Shock	MIL-STD-810G, Method 516.6 saw-tooth, 20g peak, 11ms
	Vibration	MIL-STD-810G, Method 514.6 Category 24 (IAW Figure 514.6E-1) General minimum integrity exposure (1 hour per axis).
	Fungus	Does not support fungus growth, in accordance with the guidelines of MIL-STD-454, Requirement 4
EMI	Designed to meet[1] **MIL-STD-461F** CE102, CS101, CS114, CS115, CS116, RE102, RS103	
Reliability	>100,000 hours, calculated per MIL-STD-217F2 at +71°C base plate, Ground Fixed	
Cooling Requirements	The M5252 is a conduction cooled unit. The heat is transferred to the user's cold plate through its baseplate. The Baseplate must be kept within the operating temperature range.	
Enable	The unit includes an optocoupler isolated ENABLE signal	
Output OK	The unit includes an optocoupler isolated OUTPUT OK signal	
Dimensions (LxWxH)	9.71 x 6.5 x 1.81 inches (dimensions do not include connectors)	
Weight	TBD	
I/O Connectors	Input connector: D38999/20WG41PN or eq. (Mates with: D38999/26WG41SN or eq.) Output connector: D38999/20WC98SN or eq. (Mates with: D38999/26WC98PN or eq.) Signals connector: D38999/20WC35SN or eq. (Mates with: D38999/26WC35PN or eq.)	

[1] Compliance achieved with 5µH LISN, shielded harness and static resistive load.

Pinout

J1 - Input Connector

Connector type: D38999/20WG41PN or eq.

Mates with connector type: D38999/26WG41SN or eq.

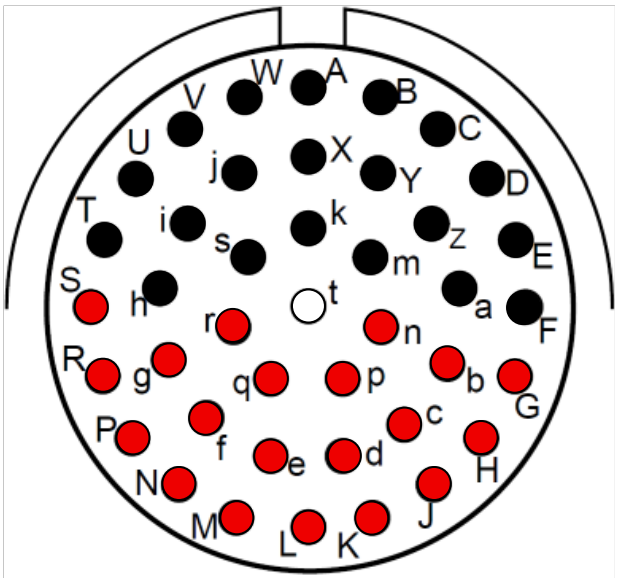

Pin #	Description	Legend
A, B, C, D, E, F, T, U, V, W, X, Y, a, h, i, j, k, m, s, z	INPUT (-)	●
G, H, J, K, L, M, N, P, R, S, b, c, d, e, f, g, n, p, q, r	INPUT (+)	●

J2 - Output Connector

Connector type: D38999/20WC98SN or eq.

Mates with connector type: D38999/26WC98PN or eq.

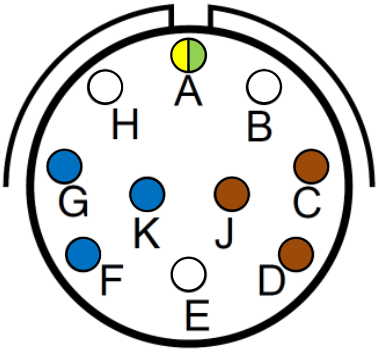

Pin #	Description
A	PE (Chassis)
B	N/A
C	Line
D	Line
E	N/A
F	Neutral
G	Neutral
H	N/A
J	LINE
K	Neutral

J3 - Control Connector

Connector type: D38999/20WC35SN or eq.

Mates with connector type: D38999/26WC35PN or eq.

Pin #	Signal
1	N/A
2	ENABLE RTN
3	ENABLE
4	OUTPUT GOOD RTN
5	OUTPUT GOOD
6	SET SLAVE
7	SYNC IN
8	SYNC OUT
9	SIGNAL RTN
10	AC OFF OUT
11	SET PHASE 0

Pin #	Signal
12	SLAVE A CONNECTED
13	SLAVE B CONNECTED
14	N/A
15	CURRENT SHARE OUT
16	PHASE SLAVE CONFIG
17	CURRENT SHARE IN REF
18	CURRENT SHARE IN
19	AC OFF IN
20	SET PHASE 1
21	CURRENT SHARE OUT REF
22	N/A

User Signals

Enable

Description

This signal turns the inverter on or off.
It is meant to be short to its return via a switch or a transistor.

Behavior

When left open, the inverter will operate (i.e. if left unconnected, the inverter will operate as long as a valid input voltage is applied to its input).
When pulled to ENABLE RTN, the inverter will turn off.

Maximum electrical parameters

When open, the voltage between ENABLE and ENABLE RTN pins will not exceed 25V.
When shorted to ENABLE RTN, the pull-down current will not exceed 20mA.
Do not connect an external voltage to this pin.

Signal Reference

This signal is referenced to ENABLE RTN pin.

Isolation

The signal is isolated from input ground, output ground and chassis.

Output Good

Description

This signal indicates that the output voltage is above minimum regulation threshold.

Behavior

When the output voltage is above the normal voltage threshold, this signal will be pulled low.
When the output voltage is below the normal voltage threshold, the signal will be left open.

Maximum electrical parameters

The user applied voltage should not exceed 5V for proper operation.
The pull-down current should not exceed 1mA for proper operation.

Usage Guidance

At extreme conditions, the optocoupler at the signal's output may pull dark current. The current level is voltage and temperature dependent. At 5V and 95°C this current can go as high as 200µA. Proper resistor selection should dictate a pull-down current of around 600µA when saturated.
For example, if using a 3.3V source, the pull-up resistor should be 4.75kΩ (assuming optocoupler saturation voltage of 0.4V). With this resistance, 200µA dark current will pull the signal voltage down from 3.3V to 2.35V, keeping it above the 2V TTL threshold for HIGH.

Signal Reference

This signal is referenced to OUTPUT GOOD RTN pin.

Isolation

The signal is isolated from input ground, output ground and chassis.

Possible Configurations

The inverter can be configured in one of three ways:

1. Stand-alone, for single-phase loads up to 1kVA / 1kW
2. Current Share, for single-phase loads of up to 3kVA / 3kW, with 3 units connected in parallel.
3. Three-phase, for three-phase loads of up to 1kVA/1kW per phase, with 3 units connected in wye or delta[2].

Stand-Alone Connection Scheme

- Connect the inverter's input to a DC power source.
- Connect the inverter's output to the AC load.
- Optional: the inverter can be turned off and tell the OUTPUT GOOD status via the signal connector.

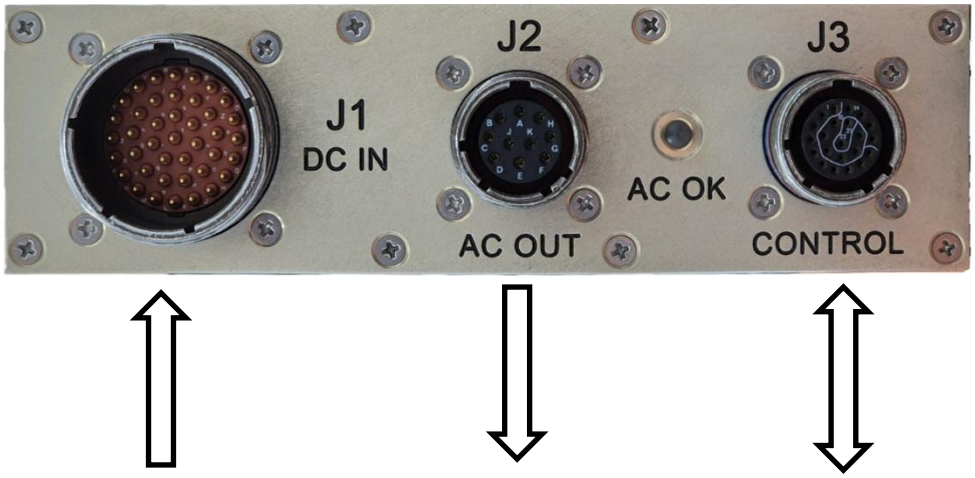

From Input DC Voltage Source

To Output AC Voltage Load

To System Management (Optional)

[2] In a Wye-connected inverters configuration, **the voltage between any two output lines is always $\sqrt{3}$ times the voltage of each individual inverter, regardless of the load type.**

- **Using three 115V inverters (Wye source):** The output lines will measure **199V** line-to-line.
- **Using three 66.4V inverters (Wye source):** The output lines will measure **115V** line-to-line. Any load connected across these lines—whether configured in Delta or Wye—will be supplied by this 115V potential.

Current-Share Connection Scheme

- Up to 2 Slave units can be connected to a Master unit.
- Connect all inverters' inputs to a DC power source (can be common or separate sources).
- Connect the inverters' outputs together, and from the common connection to the AC load.

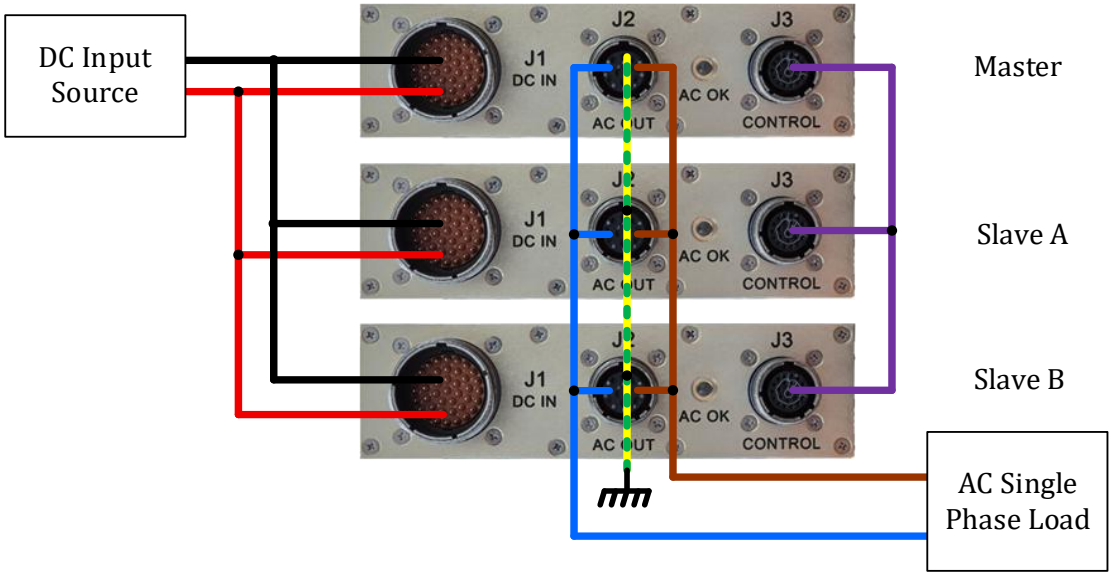

- Connect the control connectors in the following way:

Pin #	Function	MASTER CONNECTION	SLAVE A CONNECTION	SLAVE B CONNECTION
2	ENABLE RTN	To slaves pin 2	To master pin 2	To master pin 2
3	ENABLE	To slaves pin 3	To master pin 3	To master pin 3
4	OUTPUT GOOD RTN	To slaves pin 4	To master pin 4	To master pin 4
5	OUTPUT GOOD	To slaves pin 5	To master pin 5	To master pin 5
6	SET SLAVE	N/C	To master pin 16	To master pin 16
7	SYNC IN	N/C	To master pin 8	To master pin 8
8	SYNC OUT	To slaves pin 7	N/C	N/C
9	SIGNAL RTN	To slaves pin 9	To master pin 9	To master pin 9
10	AC OFF OUT	To slaves pin 19	N/C	N/C
11	SET PHASE 0	N/C	N/C	N/C
12	SLAVE A CONNECTED	N/C	To master pin 16	N/C
13	SLAVE B CONNECTED	N/C	N/C	To master pin 16
15	CURRENT SHARE OUT	To slaves pin 18	N/C	N/C
16	PHASE SLAVE CONFIG	N/C	To master pin 6	To master pin 6
17	CURRENT SHARE IN REF	N/C	To master pin 21	To master pin 21
18	CURRENT SHARE IN	N/C	To master pin 15	To master pin 15
19	AC OFF IN	N/C	To master pin 10	To master pin 10
20	SET PHASE 1	N/C	N/C	N/C
21	CURRENT SHARE OUT REF	To master pin 17	N/C	N/C

OUTPUT GOOD signals connection:

If used, an external voltage source can be connected via a pull up resistor to the signals, after connecting them in series with each other. This connection will provide a single system status. In this case, the pull-up voltage should compensate for the three collector-emitter saturation voltage drops, and should be selected at 5V. Accordingly, the pull up resistor should be selected at around 7.5kΩ, to maintain about the same pull-down current:

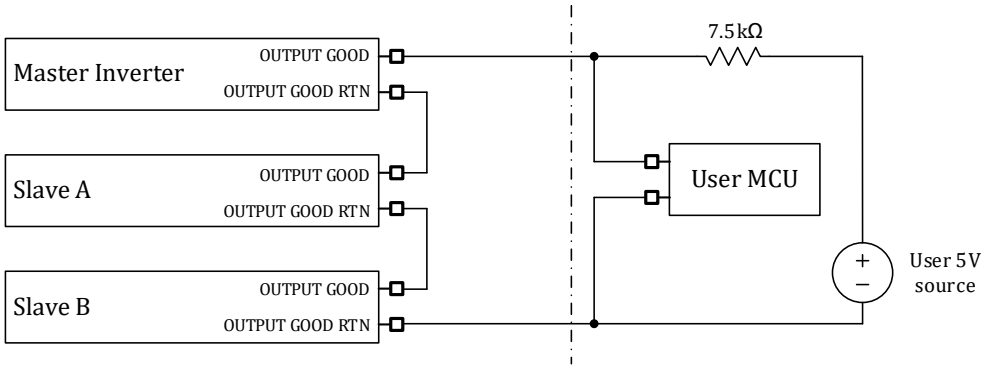

Another option is to connect each signal separately to the external voltage source, through its own pull up resistor, for a separate status indication.

Note that the only two reasons for a unit to indicate a BAD status of its output while other paralleled units indicate GOOD status, is that it is turned OFF, or malfunctioning.

Also note that if all signals are connected in series as described above, the collective signal may indicate BAD status (if, for example, one of the units is off) even though the output may be in a nominal GOOD state.

ENABLE signal connection:

Connect all ENABLE pins together and all ENABLE RTN pins together.

Use the common signal the same way it is used to control a stand-alone unit.

Three-Phase Connection Scheme

- Each inverter supplies a single phase, totaling in 3 synchronized phases with 3 inverters.
- Connect all inverters' inputs to a DC power source (can be common or separate sources).
- Connect the inverters' outputs in a Y-connection to the three-phase AC load.

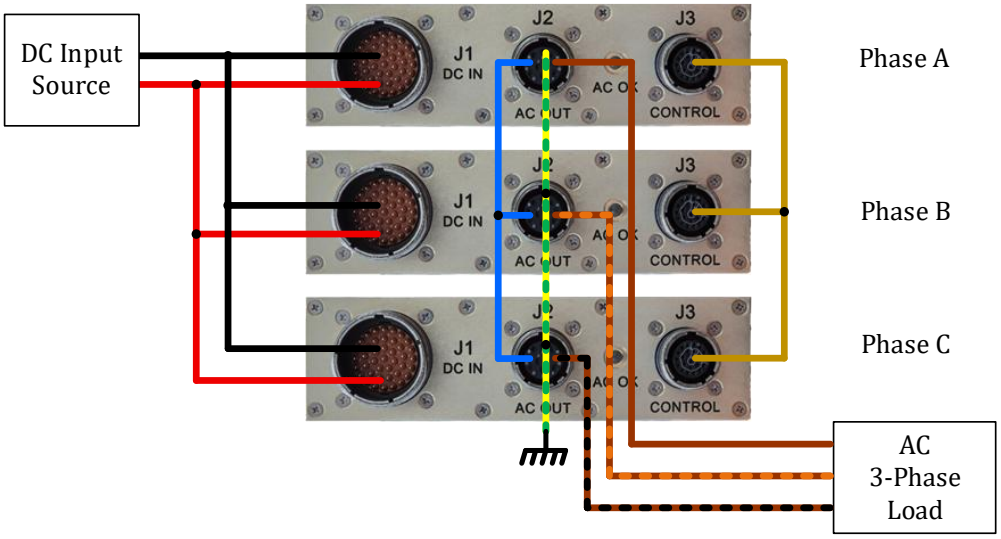

- Connect the control connectors in the following way:

Pin #	Function	MASTER CONNECTION	SLAVE 1 CONNECTION	SLAVE 2 CONNECTION
2	ENABLE RTN	To slaves pin 2	To master pin 2	To master pin 2
3	ENABLE	To slaves pin 3	To master pin 3	To master pin 3
4	OUTPUT GOOD RTN	See below	See below	See below
5	OUTPUT GOOD	See below	See below	See below
6	SET SLAVE	N/C	N/C	N/C
7	SYNC IN	N/C	To master pin 8	To master pin 8
8	SYNC OUT	To slaves pin 7	N/C	N/C
9	SIGNAL RTN	To slaves pin 9	To master pin 9	To master pin 9
10	AC OFF OUT	To phase B pin 19	To phase C pin 19	To Phase A pin 19
11	SET PHASE 0	N/C	To master pin 16	N/C
12	SLAVE A CONNECTED	N/C	N/C	N/C
13	SLAVE B CONNECTED	N/C	N/C	N/C
15	CURRENT SHARE OUT	N/C	N/C	N/C
16	PHASE SLAVE CONFIG	N/C	To master pin 6	To master pin 6
17	CURRENT SHARE IN REF	N/C	N/C	N/C
18	CURRENT SHARE IN	N/C	N/C	N/C
19	AC OFF IN	To Phase C pin 10	To Phase A pin 10	To Phase B pin 10
20	SET PHASE 1	N/C	N/C	To master pin 16
21	CURRENT SHARE OUT REF	N/C	N/C	N/C

OUTPUT GOOD signals connection:

If used, an external voltage source can be connected via a pull-up resistor to the signals, after connecting them in series with each other. This connection will provide a single system status. In this case, the pull-up voltage should compensate for the three collector-emitter saturation voltage drops, and should be selected at 5V. Accordingly, the pull up resistor should be selected at around 7.5kΩ, to maintain about the same pull-down current:

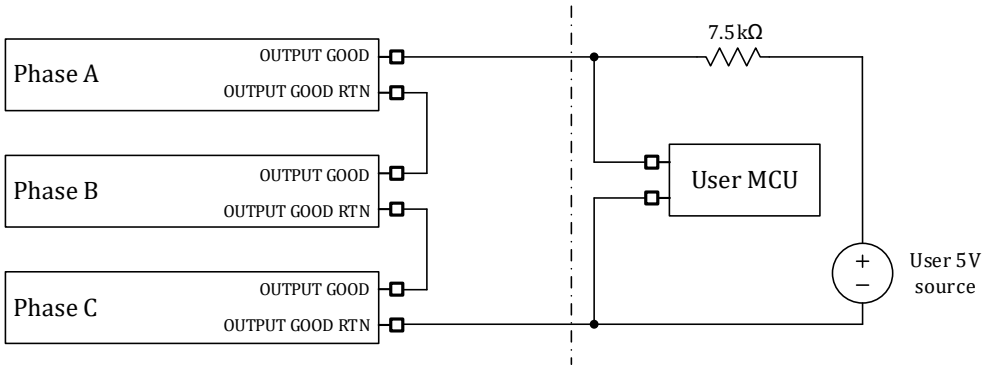

Another option is to connect each signal separately to the external voltage source, through its own pull-up resistor, for a separate status indication.

ENABLE signal connection:

Connect all ENABLE pins together and all ENABLE RTN pins together.

Use the common signal the same way it is used to control a stand-alone unit.

Outline Drawing

For detailed dimensions and tolerances see Drawing: M5252001

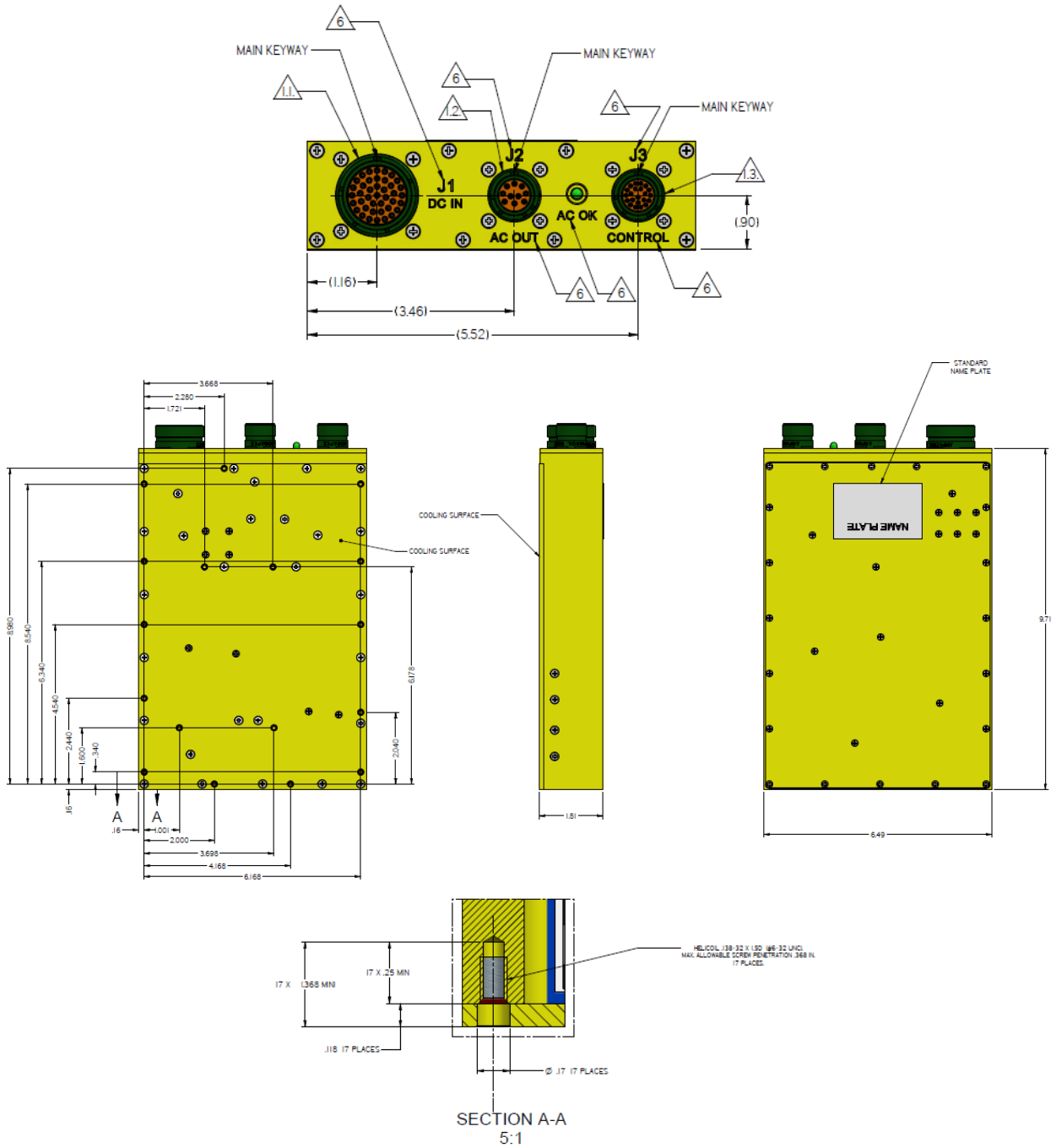

Please note: Specifications are subject to change without prior notice by the manufacturer.